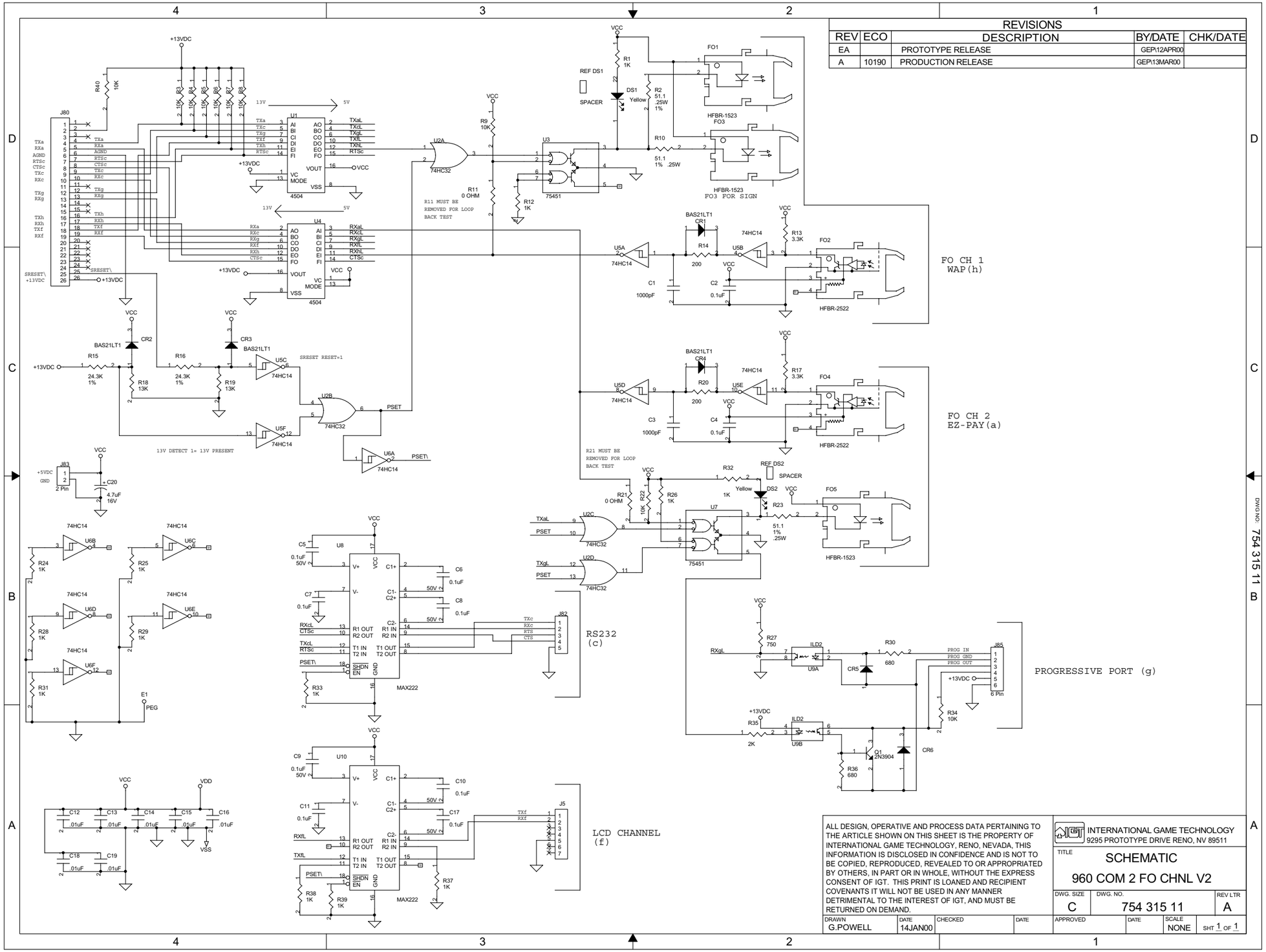
REVISIONS
REV ECO DESCRIPTION BY/DATE CHK/DATE
EA PROTOTYPE RELEASE GEP\12APR00
A 10190 PRODUCTION RELEASE GEP\13MAR00
FO CH 1
WAP(h)
FO CH 2
EZ-PAY(a)
RS232
(c)
LCD CHANNEL
(f)
PROGRESSIVE PORT (g)
R11 MUST BE
REMOVED FOR LOOP
BACK TEST
R21 MUST BE
REMOVED FOR LOOP
BACK TEST
SRESET RESET=1
13V DETECT 1= 13V PRESENT
ALL DESIGN, OPERATIVE AND PROCESS DATA PERTAINING TO THE ARTICLE SHOWN ON THIS SHEET IS THE PROPERTY OF INTERNATIONAL GAME TECHNOLOGY, RENO, NEVADA, THIS INFORMATION IS DISCLOSED IN CONFIDENCE AND IS NOT TO BE COPIED, REPRODUCED, REVEALED TO OR APPROPRIATED BY OTHERS, IN PART OR IN WHOLE, WITHOUT THE EXPRESS CONSENT OF IGT. THIS PRINT IS LOANED AND RECIPIENT COVENANTS IT WILL NOT BE USED IN ANY MANNER DETRIMENTAL TO THE INTEREST OF IGT, AND MUST BE RETURNED ON DEMAND.
INTERNATIONAL GAME TECHNOLOGY
9295 PROTOTYPE DRIVE RENO, NV 89511
TITLE
SCHEMATIC
960 COM 2 FO CHNL V2
DWG. SIZE C
DWG. NO. 754 315 11
REV LTR A
DRAWN G.POWELL
DATE 14JAN00
CHECKED
DATE
APPROVED
DATE
SCALE NONE
SHT 1 OF 1
DWG NO: 754 315 11